REV#	REVISION DESCRIPTION	DATE	APPROVED

DATE	CALCULATE POLYMER	ACTUAL POLYMER	SHOT TIME	SHOT	APPEED
02-Jun-2010	0.9 mL				

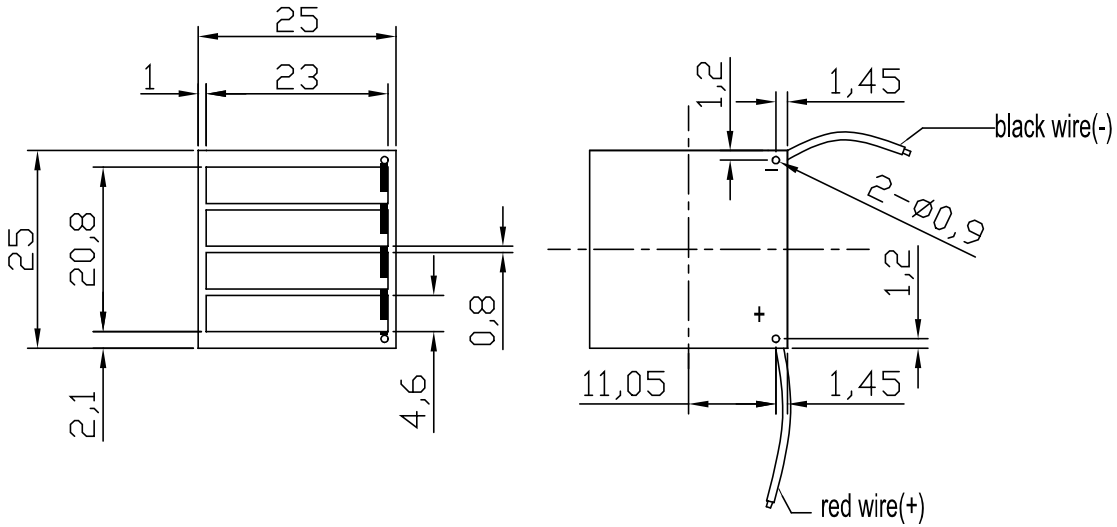

CO/CUSTOMER:	DESCRIPTION/PRODUCT: 0.07W Solar Panel			STUDIO DEL SOLE INC.		
PRODUCT MODEL: FP-PNL-P020-0033F01		DWG.NO. P081006 REV.02	FILENAME: PSLM 2.0-34	DWG. BY: Peter 02-Jun-2010	CHK. BY:	APP. BY:
SUBSTRATE: FR4 1.0mm	SIZE: 25X25	COLOR: Opaque	CABLE AWG#: AWG#30 R/B S- wire LENGTH: （下料：105mm） 100mm		SCALE: 1:1	UNIT: mm

Spec.tolerance:±10%(VP,Ip)

Cell:SCQ6T1640-B0046X0230

Cell Efficiency:16.4%

Mc	4	/	pcs
Voc	2.32	/	V
Vp	2	/	V
mAsc	37	/	mA
mAp	34	/	mA
Wp	0.07	/	W