REV#	REVISION DESCRIPTION	DATE	APPROVED
02	Add the tolerance of wire and cell efficiency	03-Dec-2010	Peter

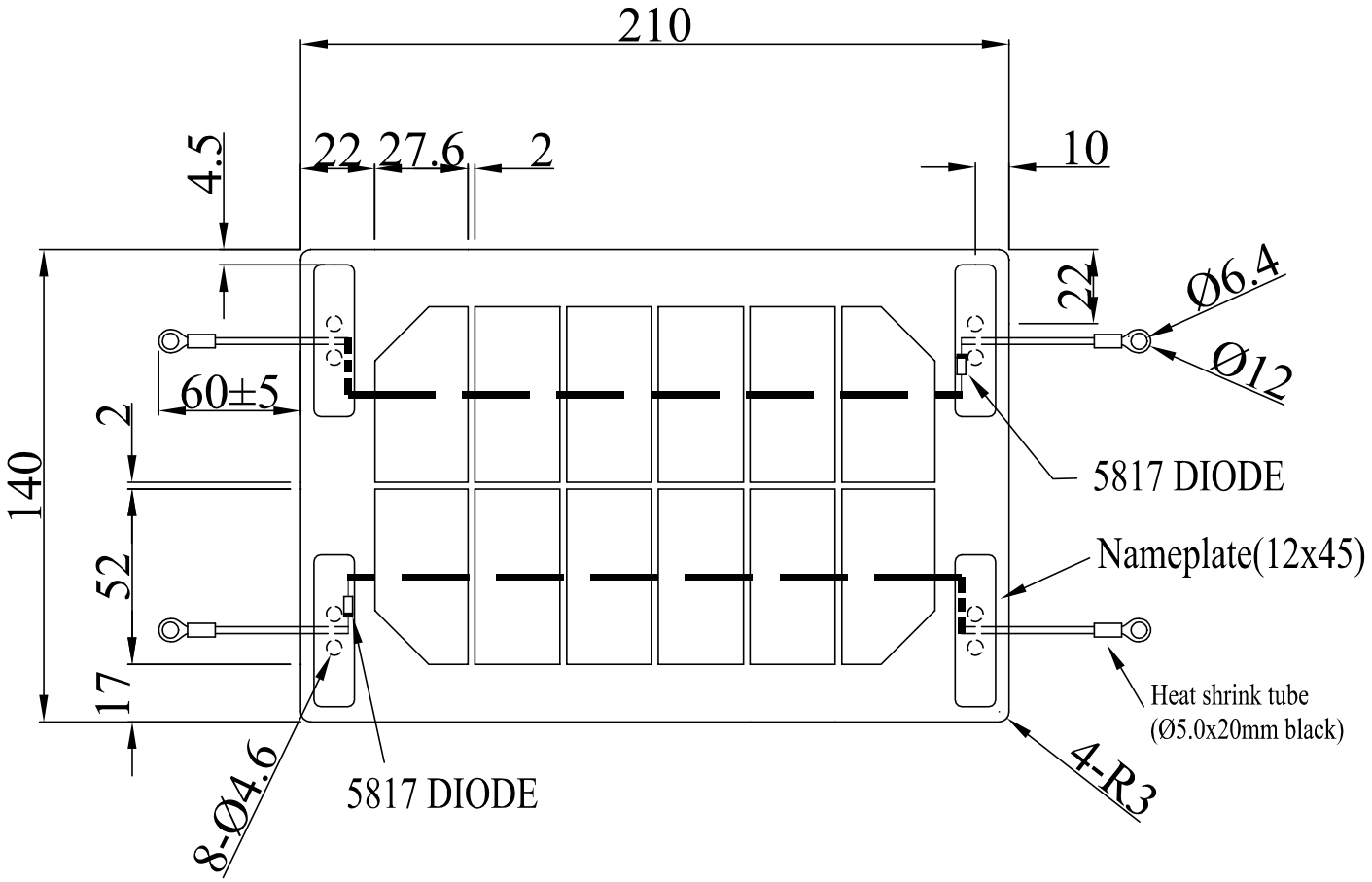

CO/CUSTOMER:	DESCRIPTION/PRODUCT: 2x1.3W Solar Panel		STUDIO DEL SOLE INC.			
PRODUCT MODEL: FP-PNL-P030-0866P03	DWG.NO. P100708 REV.02	FILENAME: PSLM 3.0-433	DWG. BY: Peter 03-Dec-2010	CHK. BY: Hong 03-Dec-2010	APP. BY:	
SUBSTRATE: APS 3.0mm	SIZE: 140X210	COLOR: SILVER(front)/BLUE(back)	CABLE AWG#: LENGTH: (下料:65mm) AWG#20 R/B S-WIRE 60mm with ring terminals		SCALE: 1:3	UNIT: mm

Spec.tolerance:±10%(VP,Ip)

Cell:W12CSCBSM166-115LA0252X0520

Cell Efficiency:16.6%

MC	6	6	pcs
Voc	3.5	3.5	V
Vp	3.0	3.0	V
mAsc	476	476	mA
mAp	433	433	mA
Wp	1.3	1.3	W