REV#	REVISION DESCRIPTION	DATE	APPROVED

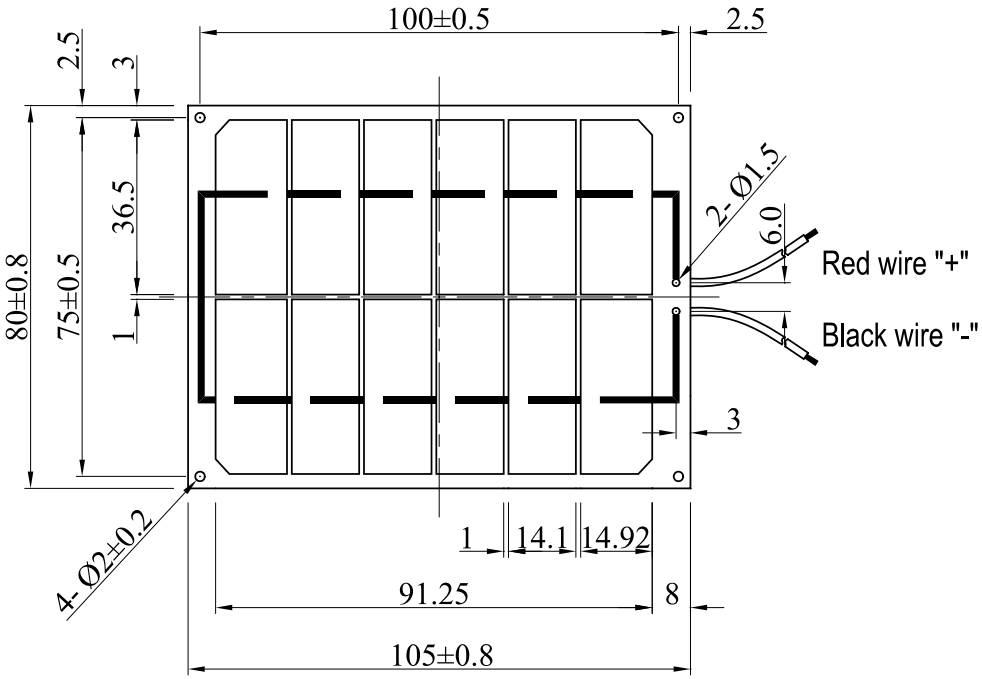

Front view

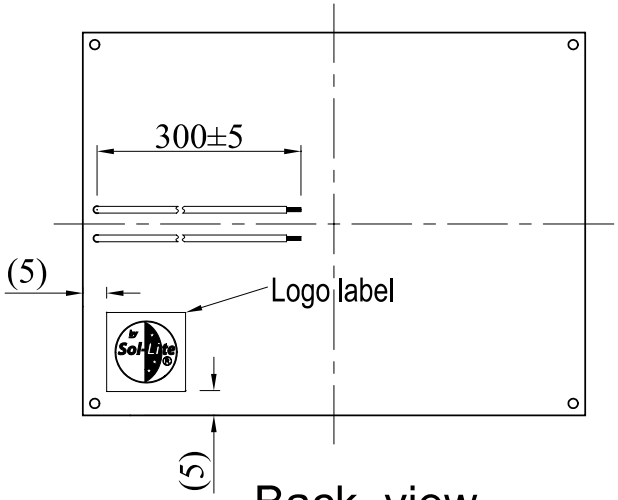

Back view

Notes, Can use corner cells or all middle cells.

CUSTOMER:	DESCRIPTION/PRODUCT: 1.1W Solar Panel	SUBSTRATE: FR4 1.5mm	SIZE: 105x80	CABLE AWG#: LENGTH: 下料 307mm AWG #24 1007 R/B S-WIRE 300mm	
PRODUCT MODEL: FP-PNL-M060-0183F01	DWG.NO. P181202 REV.01	FILENAME: PSLM 6.0-183	COLOR: Black	SCALE: 1 : 1.5	UNIT: mm
STUDIO DEL SOLE INC.			DWG. BY: Sandy 10-Dec-2018	CHK. BY: Ahong 10-Dec-2018	APP. BY: Wilber 10-Dec-2018

Spec.tolerance: ±5% (VP,Ip)

MC	12	/	pcs
Voc	7.2	/	V
Vp	6	/	V
mAsc	194	/	mA
mAp	183	/	mA
Wp	1.1	/	W